# Specification

## Small Form Factor Pluggable

Duplex LC Receptacle – SFP28

## Optical Transceivers

## Ordering Information

**T A S – A 2 E B 1 – F 1 1**

| Model Name | TAS-A2EB1-F11 | Notes |
|---|---|---|
| Voltage | 3.3V | |
| Category | With DDMI | |
| Device type | 1310 nm DFB | |
| Interface | AC / AC Coupling | |
| LOS | LVTTL | |
| Temperature | -40~+85℃ | |
| Distance | 10km | |
| Latch Color | Blue | |

## Features

- Compliant to IEEE802.3by 25GBASE-LR for TAS-A2EB1-F11
- Up to 25.78Gb/s data links
- 25G 1310nm DFB transmitter
- 25G PIN photo-detector
- 2-wire interface for management specifications compliant with SFF-8472 digital diagnostic monitoring interface for optical transceivers
- Operating case temperature: -40 to 85°C
- All-metal housing for superior EMI performance
- 25G electrical interface (OIF CEI-28G-VSR)
- Maximum power consumption 1.5W
- Advanced firmware allows customer system encryption information to be stored in transceiver
- RoHS compliant

## Applications

- High-speed storage area networks
- Computer cluster cross-connect
- Custom high-speed data pipes
- Inter Rack Connection

## General Description

This 1310 nm DFB 25Gb/s SFP28 LR transceiver is designed to transmit and receive optical data over single mode optical fiber for link length up to 10km.

The module optical connection is duplex LC and shall be compatible with SFP28. The SFP28 LR module is a dual directional device with a transmitter and receiver plus a control management interface (2-wire interface) in the same physical package. 2-wire interface is used for serial ID, digital diagnostics and module control function.

## Proposed Application Schematics

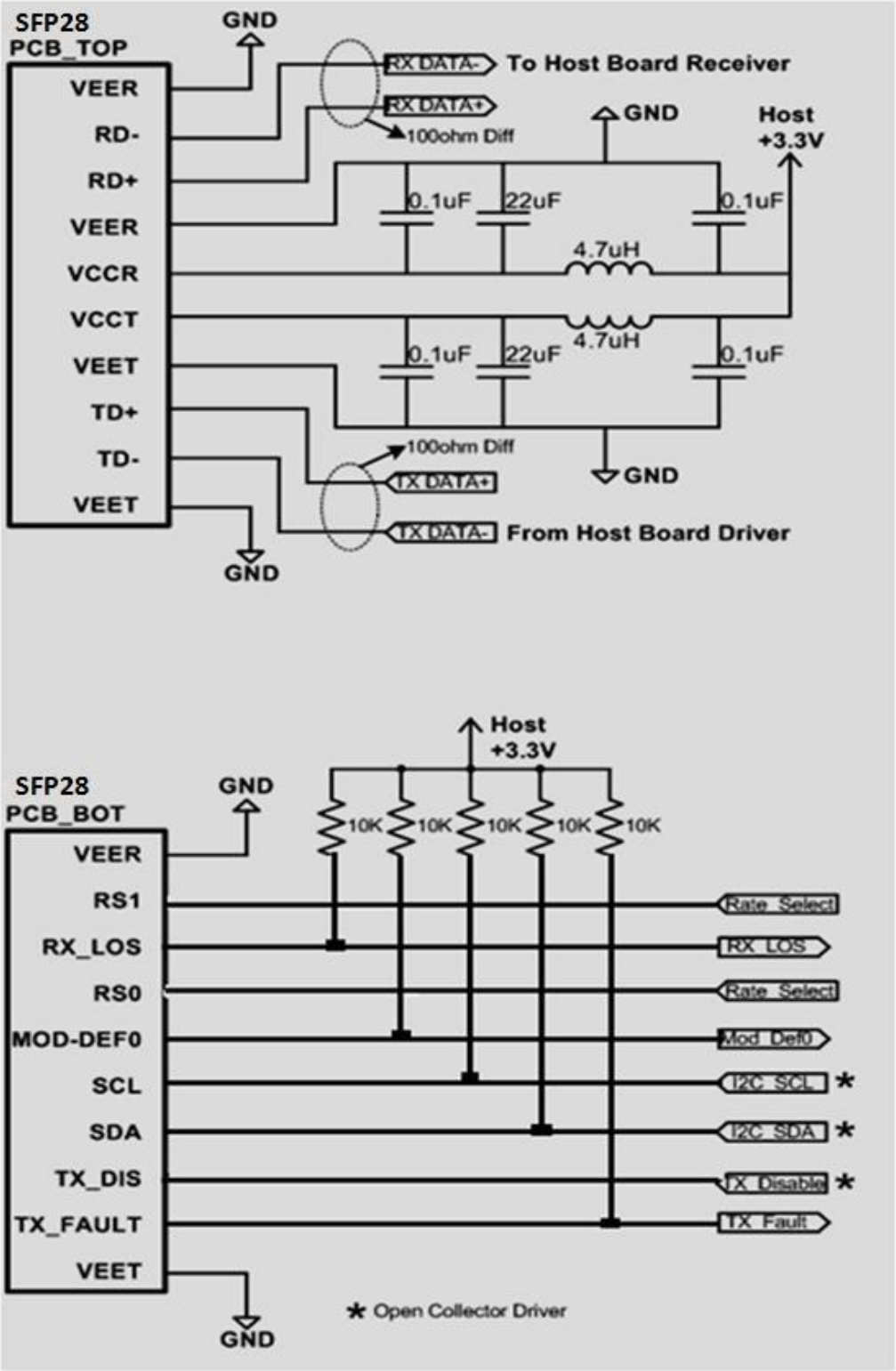

## Transceiver Block Diagram

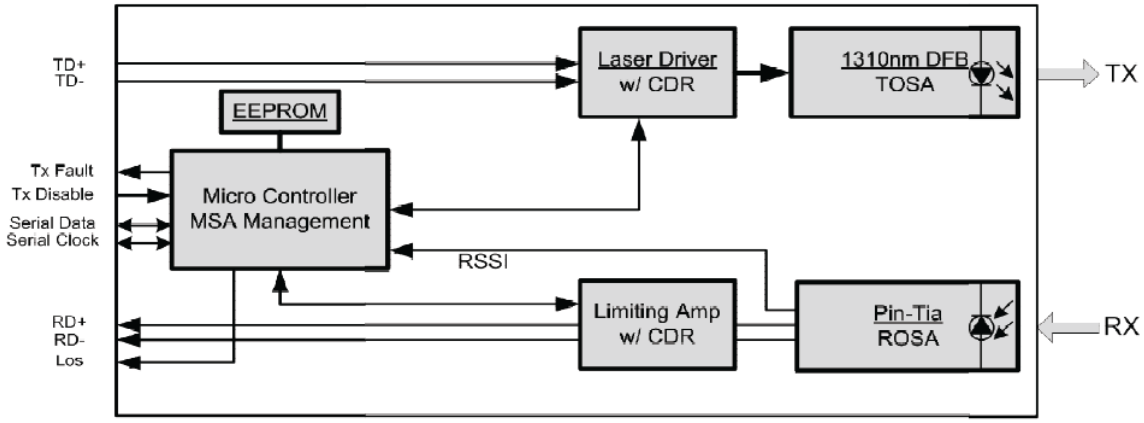


## Pin Definition

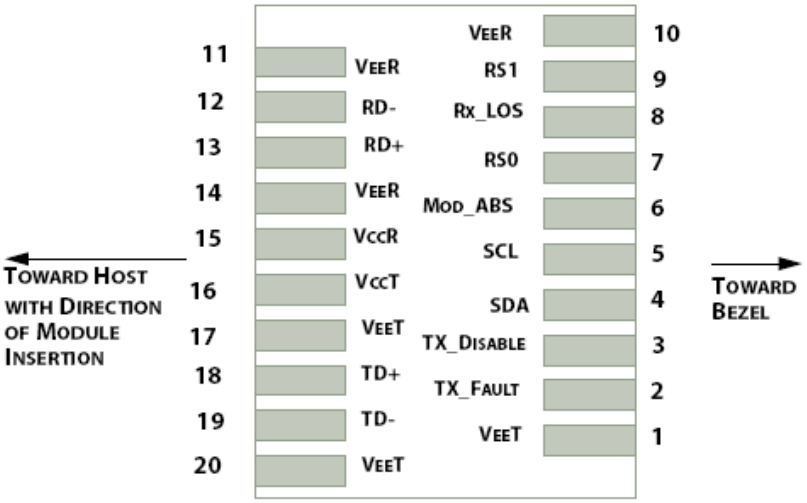


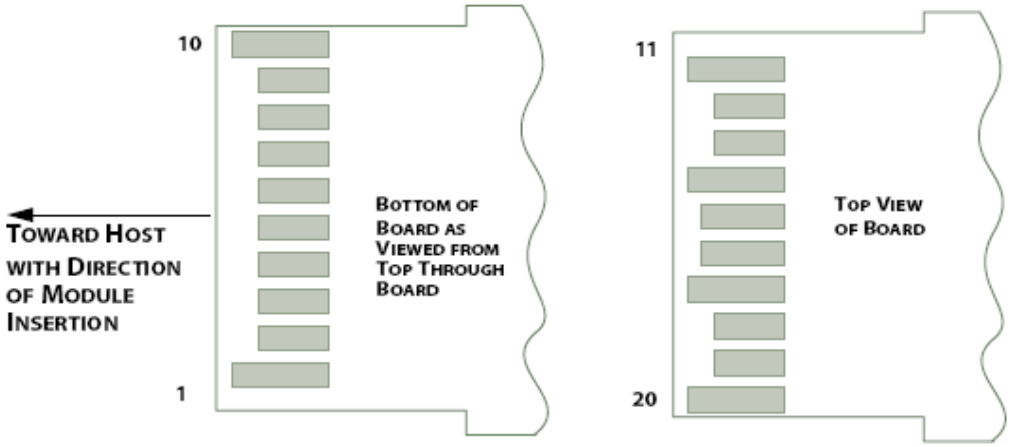

## Pin Descriptions

| PIN | Logic | Symbol | Name / Description | Note |
|---|---|---|---|---|
| 1 | | VeeT | Module Transmitter Ground | 1 |
| 2 | LVTTL-O | TX_Fault | Module Transmitter Fault | |
| 3 | LVTTL-I | TX_Dis | Transmitter Disable; Turns off transmitter laser output | |
| 4 | LVTTL-I/O | SDA | 2-Wire Serial Interface Data Line | 2 |
| 5 | LVTTL-I | SCL | 2-Wire Serial Interface Clock | 2 |
| 6 | | MOD_DEF0 | Module Definition, Grounded in the module | |
| 7 | LVTTL-I | RS0 | Receiver Rate Select (not used) | |
| 8 | LVTTL-O | RX_LOS | Receiver Loss of Signal Indication Active LOW | |
| 9 | LVTTL-I | RS1 | Transmitter Rate Select (not used) | |
| 10 | | VeeR | Module Receiver Ground | 1 |
| 11 | | VeeR | Module Receiver Ground | 1 |
| 12 | CML-O | RD- | Receiver Inverted Data Output | |
| 13 | CML-O | RD+ | Receiver Data Output | |
| 14 | | VeeR | Module Receiver Ground | 1 |
| 15 | | VccR | Module Receiver 3.3 V Supply | |
| 16 | | VccT | Module Transmitter 3.3 V Supply | |
| 17 | | VeeT | Module Transmitter Ground | 1 |
| 18 | CML-I | TD+ | Transmitter Non-Inverted Data Input | |
| 19 | CML-I | TD- | Transmitter Inverted Data Input | |
| 20 | | VeeT | Module Transmitter Ground | 1 |

**Note:**

**1. Module ground pins GND are isolated from the module case.**

**2. Shall be pulled up with 4.7K-10Kohms to a voltage between 3.15V and 3.45V on the host board.**

## Absolute Maximum Ratings

| Parameters | Symbol | Min. | Max. | Unit |
|---|---|---|---|---|
| Power Supply Voltage | VCC | 0 | 3.6 | V |
| Storage Temperature | Ts | -40 | 85 | °C |
| ESD Tolerance on all pins | | | 1 | KV HBM |
| Operating Case Temperature | Top | -40 | 85 | °C |
| Relative Humidity | RH | 5 | 85 | % |

## Recommended Operating Environment

**Recommended Operating Environment specifies parameters for which the electrical and optical characteristics hold unless otherwise noted.**

| Parameters | Symbol | Min. | Typical | Max | Unit |
|---|---|---|---|---|---|
| Power Supply Voltage | $V_{CC}$ | 3.135 | 3.3 | 3.465 | V |
| Power Supply Current | Icc | | 270 | 450 | mA |
| Operating Case Temperature | Top | -40 | 25 | 85 | °C |
| Date Rate, each Lane | | | 25.78125 | | Gb/s |

## Optical Characteristics

**The following optical characteristics are defined over the Recommended Operating Environment unless otherwise specified.**

| Parameter | Symbol | Min. | Typical | Max | Unit | Notes |
|---|---|---|---|---|---|---|
| ***Transmitter*** | | | | | | |
| Center Wavelength | λ | 1295 | 1310 | 1325 | nm | |
| Side Mode Suppression Ratio | SMSR | 30 | | | dB | |
| Average Optical Power | $P_{avg}$ | -7 | | 2 | dBm | |
| OMA | $P_{OMA}$ | -4 | | 2.2 | dBm | |
| Extinction Ratio | ER | 3.5 | | | dB | |
| Transmitter eye mask definition | | (X1, X2, X3, Y1, Y2, Y3) = (0.31, 0.4, 0.45, 0.34, 0.38, 0.4) | | | | 1 |
| ***Receiver*** | | | | | | |
| Center Wavelength | λ | 1260 | | 1370 | nm | |
| Unstressed Receiver Sensitivity (OMA) | Sens (OMA) | | | -11.3 | dBm | for BER $=5x10^{-5}$ |
| LOS Assert | LOSA | -30 | | | dBm | |
| LOS Deassert | LOSD | | | -15 | dBm | |
| LOS Hysteresis | LOSH | 0.5 | | | dB | |

**Notes:**

**1. Hit ratio 5x10-5 per sample.**

## Digital Diagnostic Functions

**The following digital diagnostic characteristics are defined over the Recommended Operating Environment unless otherwise specified. It is compliant to SFF8472 Rev10.2 with internal calibration mode. For external calibration mode please contact our sales stuff.**

| Parameter | Symbol | Min. | Max | Unit | Notes |
|---|---|---|---|---|---|
| Temperature monitor absolute error | DMI_Temp | -3 | 3 | °C | Over temp |
| Laser power monitor absolute error | DMI_TX | -3 | 3 | dB | |
| RX power monitor absolute error | DMI_RX | -3 | 3 | dB | |
| Supply voltage monitor absolute error | DMI_VCC | -3% | 3% | V | Full range |
| Bias current monitor | DMI_Ibias | -10% | 10% | mA | |

## Electrical Characteristics

**The following electrical characteristics are defined over the Recommended Operating Environment unless otherwise specified.**

| Parameter | Symbol | Min. | Typical | Max | Unit | Notes |
|---|---|---|---|---|---|---|
| **Transmitter** | | | | | | |
| Differential Input | VIH - VIL | 200 | | 900 | mVp-p | |
| Transmit Disable Voltage | $V_D$ | 2.0 | | Vcc | V | |
| Transmit Enable Voltage | $V_{EN}$ | Vee | | Vee+0.8 | V | |
| SCL, SDA--High | | 2.5 | | Vcc+0.3 | V | |
| SCL, SDA--Low | | 0 | | 0.5 | V | |
| **Receiver** | | | | | | |
| Differential Input | VIH - VIL | 500 | 800 | 1000 | mVp-p | |
| LOS Fault | $V_{LOS\ fault}$ | 2.0 | | $V_{CCHOST}$ | V | 1 |
| LOS Normal | $V_{LOS\ norm}$ | Vee | | Vee+0.8 | V | 1 |

**Notes:**

1. **LOS is an open collector output. Should be pulled up with 4.7k – 10kohms on the host board. Normal operation is logic 0; loss of signal is logic 1. Maximum pull-up voltage is 5.5V.**

## Mechanical

**Comply with SFF-8432 rev. 5.0, the improved Pluggable form factor specification.**

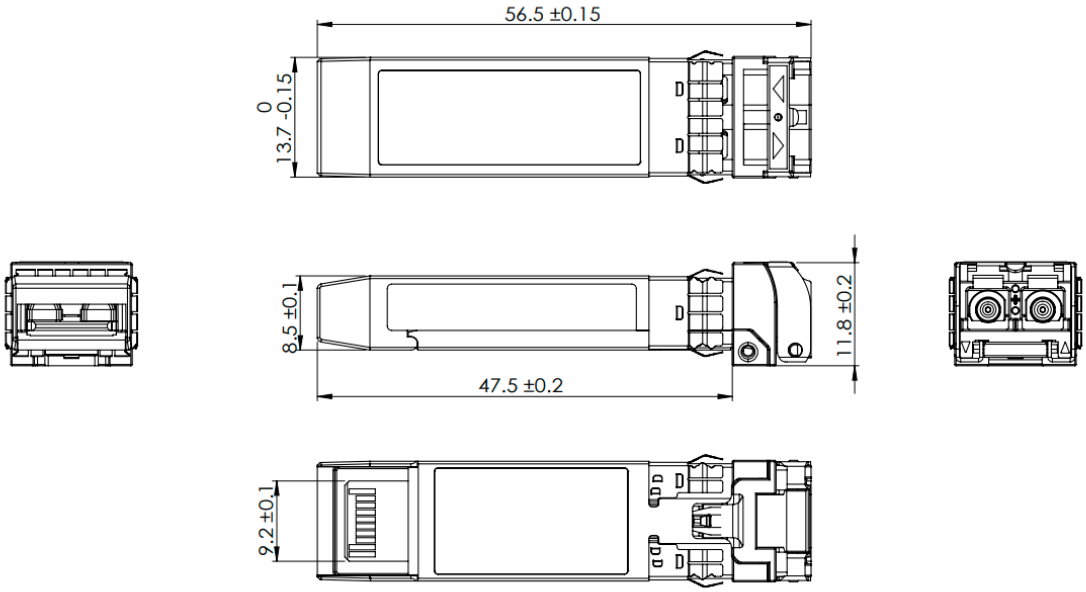

## ESD

**Normal ESD precautions are required during the handling of this module. This transceiver is shipped in ESD protective packaging. It should be removed from the packaging and handled only in an ESD protected environment.**

## LASER Safety

**This is a Class 1 Laser Product according to IEC/EN60825-1:2014 (Third Edition). This product complies with 21 CFR 1040.10 and 1040.11 except for deviations pursuant to Laser Notice No. 56, dated MAY 8, 2019.**
**Caution: Use of controls or adjustments or performance of procedures other than those specified herein may result in hazardous radiation exposure.**
**Attention: L'utilisation de commandes ou de réglages ou l'exécution de procédures autres que celles spécifiées dans le document peut entraîner une exposition à des radiations dangereuses.**

## Contact Information


| | |
|---|---|
| **Formerica OptoElectronics Inc.**<br>5F-11, No.38, Taiyuan St., Zhubei City,<br>Hsinchu County 30265, Taiwan<br>Tel: +886-3-5600286 Fax: +886-3-5600239 | **San Diego, CA**<br>Tel: 1-949-466-8069 |
| inquiry@formericaoe.com<br>www.formericaoe.com | |

## Revision History

| Date | Version | Description |
|---|---|---|
| 05/10/2022 | 1.0 | Initial release |
| 02/01/2023 | 1.1 | Modify ME drawing (add tolerances) |