Specification

Copper SFP + Transceivers

10GBASE - T

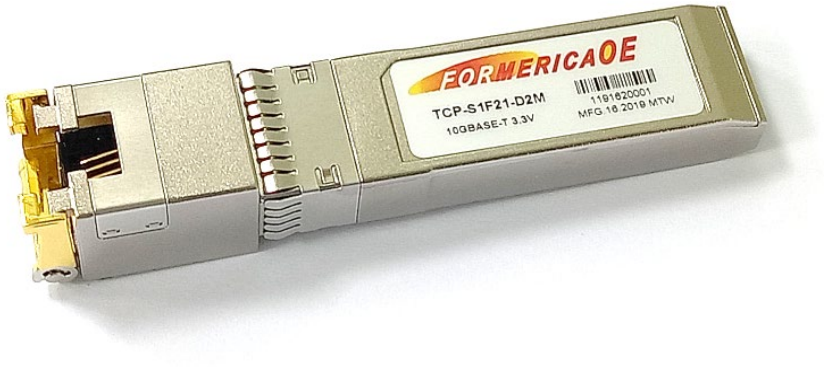

Ordering Information

T C P – S 1 F 2 1 – D 2 M

Model Name	TCP-S1F21-D2M	Note
Voltage	3.3V	
Date Rate	10G	
Distance	30m	
Temperature	0 °C~+70°C	
Type	LOS	

Features

- Supports Links up to 30m using Cat 6a / 7 Cable
- SFF - 8431 and SFF - 8432 MSA Compliant
- IEEE 802.3az Compliant
- Low Power Consumption (2.5W MAX @ 30m)
- Fast Retrain EMI Cancellation Algorithm
- Low EMI Emissions
- I2C 2-Wire Interface for Serial ID and PHY Register Access
- Auto-negotiates with other 10GBase-T PHYs
- Support 10GBASE-T / 5GBASE-T / 2.5GBASE-T / 1000BASE-T / 100BASE-T
- MDI / MDIX Crossover
- Multiple Loopback Modes for Testing and Troubleshooting
- Built-in Cable Monitoring and Link Diagnostic Features
  - Cable Length Measurements
  - Opens / Shorts
- Robust Die Cast Housing
- Bail Latch Style ejector mechanism
- Unshielded and Shielded cable support
- Support USXGMII and SGMII

Product Descriptions

10GBASE - T Copper Small Form Pluggable (SFP+) transceivers are based on the SFP+ Multi Source Agreement (MSA). They are compatible with 10GBASE-T / 5GBASE-T / 2.5GBASE-T / 1000BASE-T / 100BASE-T standards as specified in IEEE 802.3. The 10GBASE - T physical layer IC (PHY) can be accessed via I2C, allowing access to all PHY settings and features.

Absolute Maximum ratings

Parameter	Symbol	Min	Max	Unit	Notes
Maximum Supply Voltage	Vcc	-0.5	4.0	V	
Storage Temperature	Ts	-40	85	°C	
Operating Humidity	RH	5	85	%	

General Specifications

Parameter	Symbol	Min	Typ	Max	Unit	Notes
Data Rate	DR		10		Gbps	1
Cable Length	CL		30		meter	2
Bit Error Rate	BER			10^{-12}		
Supply Current	I_{supply}		700	750	mA	3
Input Voltage	V_{CC}	3.13	3.3	3.47	V	4
Maximum Voltage	V_{MAX}			4	V	
Surge Current	I_{surge}			30	mA	5

Note :

1. IEEE 802.3
2. Cat 6a/7 UTP
3. For electrical power interface
4. Referenced to GND
5. Hot Plug above steady state current

Pin Definition and Descriptions

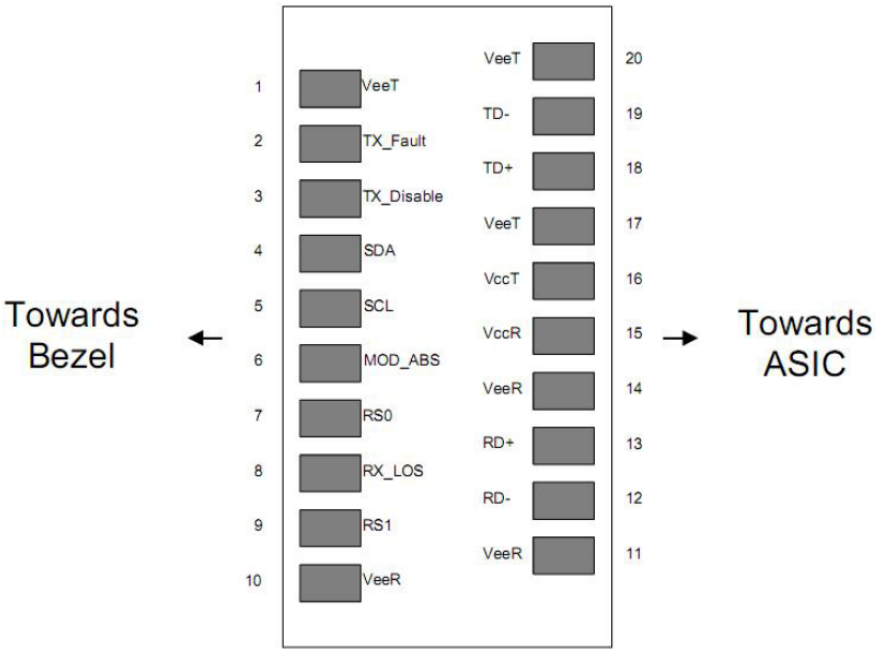

PIN	Symbol	Name / Description	Notes
1	VeeT	Module Transmitter Ground	
2	TX_Fault	Module Transmitter Fault Indication	
3	TX_Dis	Transmitter Disable	PHY disabled on high or open
4	SDA	2-Wire Serial Interface Data Line	
5	SCL	2-Wire Serial Interface Clock	
6	Mod_ABS	Module Absent. Grounded within the module	
7	RS0	Rate Select 0	
8	RX_LOS	Receiver Loss of Signal Indication	
9	RS1	Rate Select 1	
10	VeeR	Module Receiver Ground	
11	VeeR	Module Receiver Ground	
12	RD-	Receiver Inverted Data Output	
13	RD+	Receiver Data Output	
14	VeeR	Module Receiver Ground	
15	VccR	Module Receiver 3.3 V Supply	
16	VccT	Module Transmitter 3.3 V Supply	
17	VeeT	Module Transmitter Ground	
18	TD+	Transmitter Non-Inverted Data Input	
19	TD-	Transmitter Inverted Data Input	
20	VeeT	Module Transmitter Ground	

Mechanical Specifications

The mechanical specifications outlined in the SFP+ MSA. The front portion of the SFP (part extending beyond the face plate of the host) is larger to accommodate the RJ – 45 connector.

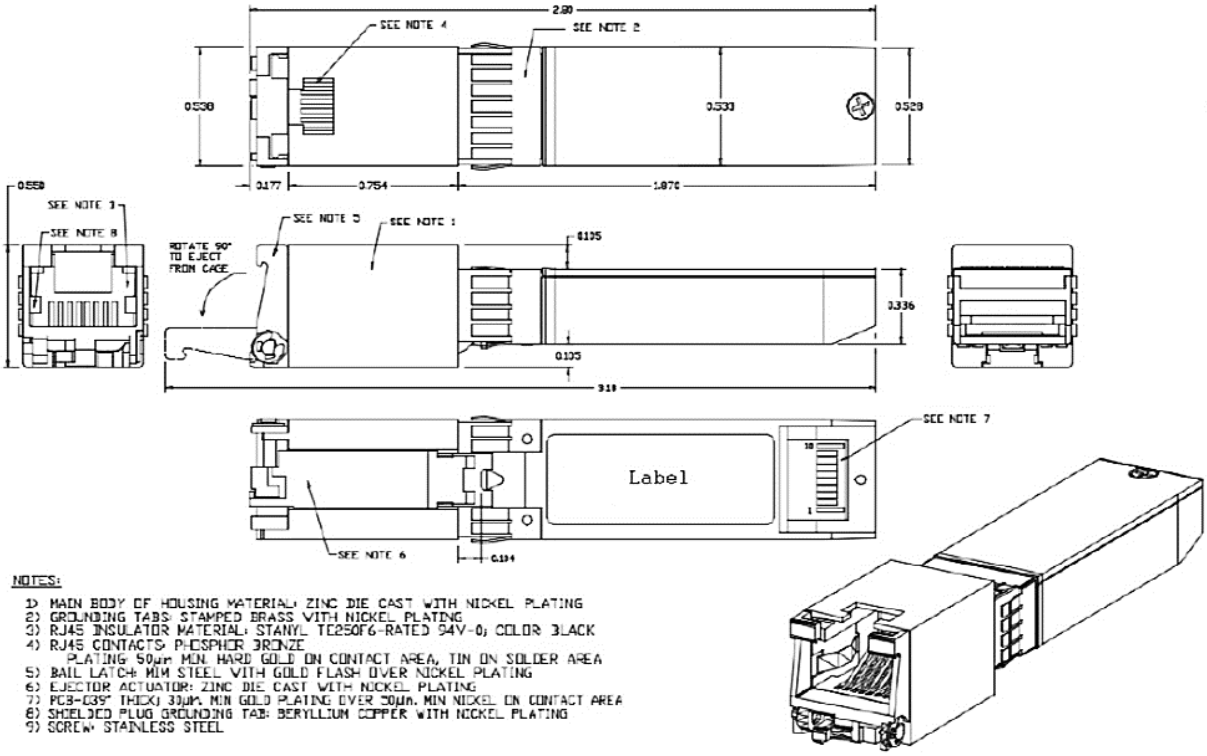

ESD

Normal ESD precautions are required during the handling of this module. This transceiver is shipped in ESD protective packaging. It should be removed from the packaging and handled only in an ESD protected environment.

Contact Information

Formerica OptoElectronics Inc. 5F-11, No.38, Taiyuan St., Zhubei City, Hsinchu County 30265, Taiwan Tel: +886-3-5600286 Fax: +886-3-5600239	**San Diego, CA** Tel: 1-949-466-8069
inquiry@formericaoe.com www.formericaoe.com	

Revision History

Date	Version	Description
02/25/2019	0.0	Preliminary release
04/11/2019	0.1	To update the description “Support 10GBASE-T / 5GBASE-T / 2.5GBASE-T / 1000BASE-T / 100BASE-T” on page 2.
04/16/2019	0.2	Cover page update
09/16/2020	1.0	Formal release
05/31/2021	1.1	Add the item of “Pin Definition and Descriptions”
09/29/2021	1.2	Add description of “Support USXGMII and SGMII” in Features section.
03/25/2022	1.3	Add the tables of Absolute maximum ratings and General specifications