Specification

Quad Small Form-factor Pluggable

Optical Transceiver Module

QSFP28 100G PSM4 2KM

Ordering Information

T Q S – Q 1 4 B 9 – D C 1

Model Name	TQS-Q14B9-DC1	Note
Voltage	3.3V	
Device type	1310 nm DFB / PIN	
Distance	2km (SMF)	
Temperature	0 °C~+70°C	

Features

- Compliant with 100G PSM4 Specification 2.0
- Compliant with 100G Ethernet IEEE 802.3bm
- Compliant to SFF-8665 (QSFP28 Solution) Revision 1.8
- MPO optical connector (IEC61754-7-1)
- Operating case temperature (0°C~70°C)
- Transmission length up to 2 km via single mode fiber

Applications

- Datacenter and enterprise networking
- Switch router and HBA's
- InfiniBand EDR
- HPC interconnections

Absolute Maximum Rating

Not necessarily applied together. Exceeding these values may cause permanent damage. Functional operation under these conditions is not implied.

Parameter	Symbol	Conditions	Min.	Max.	Unit
Storage Temperature	TStorage		-40	+85	°C
Relative Humidity	RH		0	+85	%
Supply Voltage	VCC		0	3.6	V
Power Consumption				3.5	W
Supply current	ICC			1200	mA

Recommended Operating Conditions

Parameter	Symbol	Conditions	Min.	Typ.	Max.	Unit
Case Temperature	T_C		0		70	°C
Power Supply Voltage	V_{CC}		3.15	3.3	3.45	V
Signaling Rate, Each Lane				25.78125		Gbps
Data Speed Tolerance	ΔDR		-100	---	+100	ppm
Power Supply Noise			---	---	50	mVpp
Supply Noise Rejection			---	---	100	mV
Operating Distance	D		---	---	2	km

Electrical Characteristics

Parameter	Symbol	Min.	Typical	Max	Unit	Notes
Transmitter						
Differential Input Impedance		90	100	110	Ω	
Differential Input Swing		200		900	mV	
TP1/TP1a Interface	Compliant to IEEE 802.3ba XLPPI					
Receiver						
Differential Output Impedance		90	100	110	Ω	
Differential Output Swing		200		900	mV	
TP4 Interface	Compliant to IEEE 802.3ba XLPPI					

Transmitter Characteristic

Parameter	Symbol	Conditions	Min.	Typ.	Max.	Unit
Operating Wavelength, each lane	λ	T_c = 0~70 °C	1295		1325	nm
RMS Spectral Width	λ_{rms}				1.5	nm
Average launch power, each lane	P_{AVG}		-9.4		+2	dBm
Optical Modulation Amplitude (OMA), each lane	P_{OMA}		-5.15		+2.2	dBm
Difference in launch power between any two lanes (OMA)	Ptx, diff				5	dB
Average launch power of OFF transmitter, each lane	Poff				-30	dBm
Extinction ratio	ER		3.5			dB
Optical return loss tolerance	TOL				20	dB
Transmitter Eye Mask Margin	EMM		5			%

Receiver Characteristic

Parameter	Symbol	Conditions	Min.	Typ.	Max.	Unit
Center Wavelength	λ_C	T_c = 0~70 °C	1295		1325	nm
Damage threshold	TH_d		+3			dBm
Average Power at Receiver Input, Each Lane			-12.66		+2	dBm
Non-Stressed Receiver Sensitivity (OMA), Each Lane	S_{OMA}	BER= $5x10^{-5}$			-11.35	dBm
LOS Assert	LOS_A		-30			dBm
LOS De-Assert	LOS_D				-15	dBm
LOS Hysteresis	LOS_H		0.5		6	dB

Digital Diagnostic Function

Parameter	Symbol	Min.	Max	Unit	Notes
Temperature monitor absolute error	DMI_Temp	-3	3	°C	Over operating temp
Supply voltage monitor absolute error	DMI_VCC	-0.15	0.15	V	Full operating range
Channel RX power monitor absolute error	DMI_RX_Ch	-3	3	dB	Ch1 ~ Ch4
Channel Bias current monitor	DMI_Ibias_Ch	-10%	10%	mA	Ch1 ~ Ch4
Channel TX power monitor absolute error	DMI_TX_Ch	-3	3	dB	Ch1 ~ Ch4

QSFP28 Module Pad Assignments and Descriptions

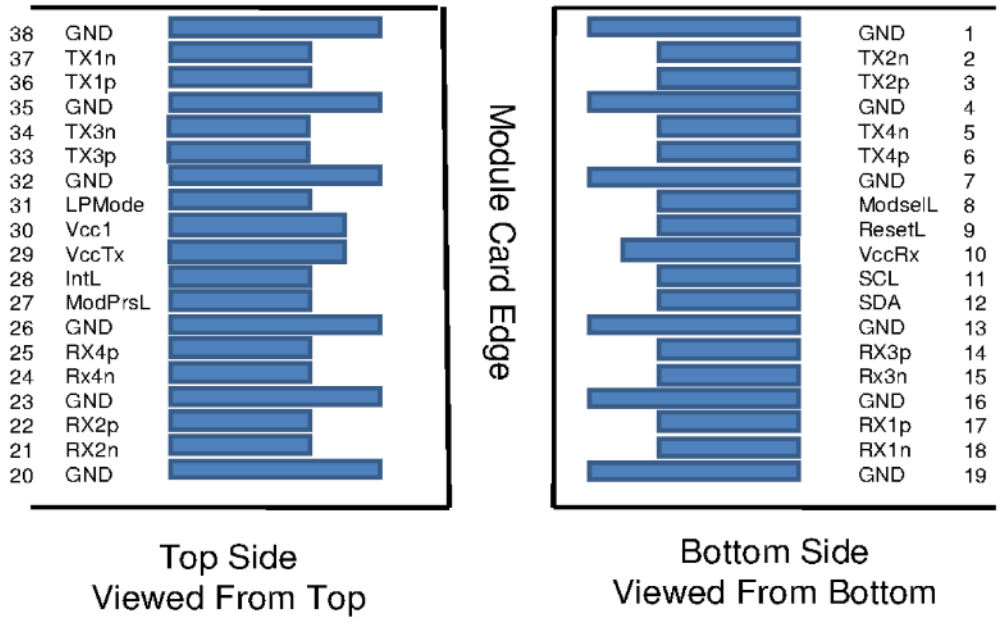

Pin	Logic	Symbol	Description	Note
1		GND	Ground	
2	CML-I	Tx2n	Transmitter Inverted Data Input	
3	CML-I	Tx2p	Transmitter Non-Inverted Data output	
4		GND	Ground	
5	CML-I	Tx4n	Transmitter Inverted Data Input	
6	CML-I	Tx4p	Transmitter Non-Inverted Data output	
7		GND	Ground	
8	LVTTL-I	ModSelL	Module Select	
9	LVTTL-I	ResetL	Module Reset	
10		VccRx	+ 3.3V Power Supply Receiver	
11	LVCMOS-I/O	SCL	2-Wire Serial Interface Clock	
12	LVCMOS-I/O	SDA	2-Wire Serial Interface Data	
13		GND	Ground	
14	CML-O	Rx3p	Receiver Non-Inverted Data Output	
15	CML-O	Rx3n	Receiver Inverted Data Output	
16		GND	Ground	
17	CML-O	Rx1p	Receiver Non-Inverted Data Output	
18	CML-O	Rx1n	Receiver Inverted Data Output	
19		GND	Ground	
20		GND	Ground	
21	CML-O	Rx2n	Receiver Inverted Data Output	
22	CML-O	Rx2p	Receiver Non-Inverted Data Output	
23		GND	Ground	
24	CML-O	Rx4n	Receiver Inverted Data Output	
25	CML-O	Rx4p	Receiver Non-Inverted Data Output	
26		GND	Ground	
27	LVTTL-O	ModPrsL	Module Present	
28	LVTTL-O	IntL	Interrupt	
29		VccTx	+3.3 V Power Supply transmitter	
30		Vcc1	+3.3 V Power Supply	
31	LVTTL-I	LPMode	Low Power Mode	
32		GND	Ground	
33	CML-I	Tx3p	Transmitter Non-Inverted Data Input	
34	CML-I	Tx3n	Transmitter Inverted Data Output	
35		GND	Ground	
36	CML-I	Tx1p	Transmitter Non-Inverted Data Input	
37	CML-I	Tx1n	Transmitter Inverted Data Output	
38		GND	Ground	

Mechanical Design Diagram

Unit: mm

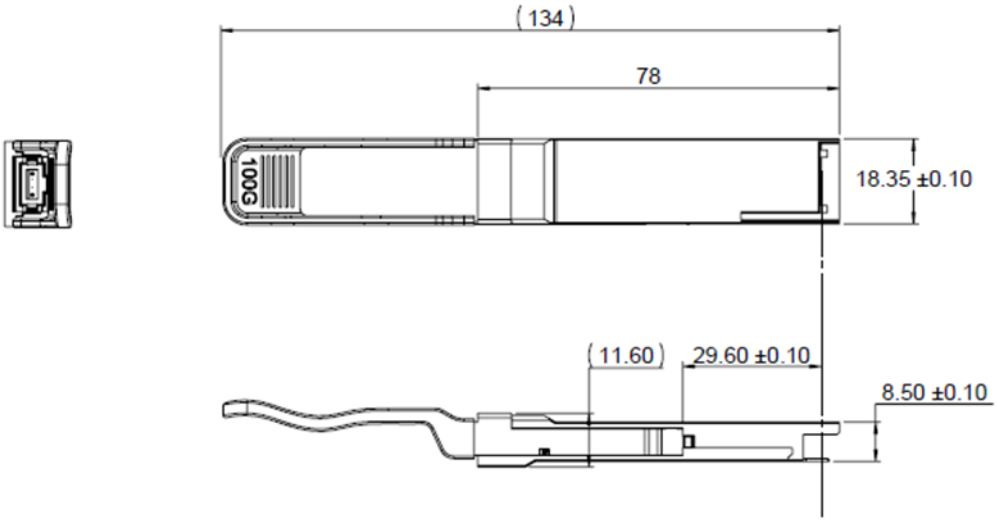

To minimize MPO connection induced reflections, an MPO receptacle with 8-degree angled end-face is utilized for this product. A female MPO connector with 8-degree end-face should be used with this product as illustrated in below.

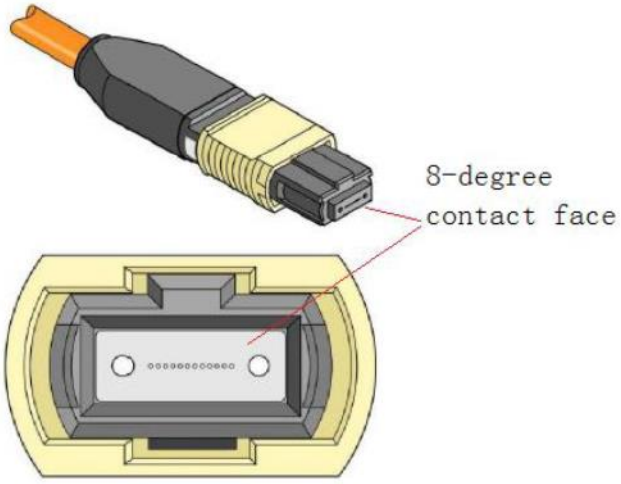

ESD

This transceiver is specified as ESD threshold 1 kV for SFI pins and 2 kV for all others electrical input pins, tested per MIL-STD-883, Method 3015.4 /JESD22-A114-A (HBM). However, normal ESD precautions are still required during the handling of this module. This transceiver is shipped in ESD protective packaging. It should be removed from the packaging and handled only in an ESD protected environment.

LASER Safety

This is a Class 1 Laser Product according to IEC/EN60825-1:2014 (Third Edition). This product complies with 21 CFR 1040.10 and 1040.11 except for deviations pursuant to Laser Notice No. 56, dated MAY 8, 2019.

Caution: Use of controls or adjustments or performance of procedures other than those specified herein may result in hazardous radiation exposure.

Attention: L'utilisation de commandes ou de réglages ou l'exécution de procédures autres que celles spécifiées dans le document peut entraîner une exposition à des radiations dangereuses.

Contact Information

Formerica OptoElectronics Inc. 5F-11, No.38, Taiyuan St., Zhubei City, Hsinchu County 30265, Taiwan Tel: +886-3-5600286 Fax: +886-3-5600239	**San Diego, CA** Tel: 1-949-466-8069
inquiry@formericaoe.com www.formericaoe.com	

Revision History

Date	Version	Description
03/15/2020	1.0	Initial release
04/14/2021	1.1	Update cover photo