Specification

Quad Small Form-factor Pluggable
Optical Transceiver Module
100GBASE SR4

Ordering Information

T Q S – Q 1 4 H 9 – J C A

Model Name	Voltage	Category	Device type	Interface	Temperature	Distance	Latch Color
TQS-Q14H9-JCA	3.3V	With DDMI	850 nm VCSEL	CML/CML	0 ~+70℃	100m (OM4)	Black

Description

FormericaOpto Electronics Inc. 100G-SR4 optical transceiver module (100G-SR4 TRx) with Quad Small Form-Factor Pluggable 28 (QSFP28) form-factor is of high performance in bi- directional signal transmission and aggregate 100Gbps bandwidth, which design to support Ethernet 100G-SR4/CAUI-4 and HPC of InfiniBand EDR standard. Compared with the conventional copper-based direct attach cables (DACs), the optical fiber with pluggable MPO connector enables the ease of complicated data center cabling deployment by the longer, lighter, and bendable characteristics. The optical transceiver module utilizes high- performance 850-nm GaAs VCSELs and PIN PDs with superior integration in signal integrity and optical sub-assembly, whose bit-error-rate is better than 10-15 for reliable packet communication within data center.

Features

- Compliant with 100G Ethernet IEEE 802.3bm 100GBASE-SR4 standards
- Compliant to SFF-8665 (QSFP28 Solution)
- Supports 100 Gbps data rate links of 70m/100m via OM3/OM4, respectively
- Low power consumption of max 2.5W (Typ. 1.8W)
- Hot pluggable electrical interface
- Using standard 12/8 lane optical fiber with MPO pluggable optical connector
- 0 to 70°C case temperature operating range
- RoHS Compliant

Applications

- 100GBASE-SR4 Ethernet links.
- InfiniBand EDR, FDR and QDR.
- HPC Interconnects.
- Proprietary Interconnections.

Absolute Maximum Rating

Not necessarily applied together. Exceeding these values may cause permanent damage. Functional operation under these conditions is not implied.

Parameter	Symbol	Min	Typ.	Max	Unit	Note
Storage Temperature	Ts	-40		85	℃	
3.3V Power Supply Voltage	Vcc	-0.5		3.6	V	
Data Input Voltage-Single Ended		-0.5		Vcc+0.5	V	Notes
Control Input Voltage		-0.5		3.6	V	
Relative Humidity	RH	5		85	%	
Rx Optical Damage Threshold / Lane		3.4			dBm	

Notes : Non-condensing.

Recommended Operating Conditions

Parameter	Min	Typical	Max	Unit	Note
Case Operating Temperature	0	40	70	℃	
Power Supply Voltage	3.135	3.3	3.465	V	
Date Rate per Channel		25.78125		Gbps	
Bit Error Ratio	10^{-15}	10^{-12}			
Control Input Voltage High	2		Vcc+0.3	V	
Control Input Voltage Low	-0.3		0.8	V	
Two Wire Serial (TWS) Interface Clock Rate		100	400	kHz	
Differential Data Input / Output Load		100		Ohms	
Fiber Length: 2000 MHz.km 50/12um MMF (OM3)	0.5		70	M	
Fiber Length: 4700 MHz.km 50/12um MMF (OM4)	0.5		100	M	

Electrical Characteristics

Parameter	Min	Typical	Max	Unit	Note
Transceiver Electrical Characteristics					
TRx Power Consumption		1.8	2.5	W	
TRx Power-on Initialization Time			2000	ms	
CAUI-4 Module Electrical Input Characteristics (TP1)					
Signaling Rate per Lane		25.78125		Gbps	1
Differential pk-pk input voltage tolerance			900	mV	
Differential Input Return Loss	See Eq.1				2
Differential to Common-mode Input Return Loss	See Eq.2				3
Differential termination mismatch			10	%	
Module stressed input test	See Eq.3				4
Single Ended Input Voltage Tolerance	-0.4		3.3	V	
DC common mode voltage	-350		2850	mV	

Notes:

1. Signaling rate tolerance is within +/- 100ppm.

2. $$RLd(f) \geq \begin{cases} 9.5 - 0.37f & 0.01 \leq f < 8 \\ 4.75 - 7.4\log_{10}\left(\frac{f}{14}\right) & 8 \leq f < 19 \end{cases} \text{ (dB)}$$ **(Eq.1)**

Where

f ***is the frequency in GHz***

RLd **is the CAUI-4 Chip-to-module input differential return loss**

3. $$RLdc(f) \geq \begin{cases} 22 - 20\left(\frac{f}{25.78}\right) & 0.01 \leq f < 12.89 \\ 15 - 6\left(\frac{f}{25.78}\right) & 12.89 \leq f < 19 \end{cases} \text{ (dB)}$$ **(Eq.2)**

where

f **is the frequency in GHz**

RLdc **is the CAUI-4 Chip-to-module input differential to common mode input return loss**

4. **The module stressed input tolerance is measured using the procedure defined in 83E.3.4.1.1, IEEE802.3bm. Module stressed input parameters include.**
   - a. **Eye width of 0.46 UI.**
   - b. **Applied pk-pk sinusoidal jitter is per Table 88-13 per IEEE802.3bm**
   - c. **Eye height of 95mV**

Parameter	Min	Typical	Max	Unit	Note
CAUI-4 Module Electrical Output Characteristics (TP4)					
Signaling Rate per Lane		25.78125		Gbps	1
AC Common-Mode Output Voltage (RMS)			17.5	mV	
Differential Output Voltage			900	mV	
Eye Width	0.57			UI	
Eye Height, Differential	228			mV	
Vertical Eye Closure			5.5	dB	
Differential Output Return Loss	See Eq. 1				2
Common to Differential Mode Conversion Return Loss	See Eq. 2				3
Differential termination mismatch			10	%	
Transition Time (20% to 80%)	12			ps	
DC Common Voltage	-350		2850	mV	

Notes:

1. **Signaling rate tolerance is within +/- 100ppm.**
2. $$RLd(f) \geq \begin{cases} 9.5 - 0.37f & 0.01 \leq f < 8 \\ 4.75 - 7.4\log_{10}\left(\frac{f}{14}\right) & 8 \leq f < 19 \end{cases} \quad (\text{dB}) \qquad \textbf{(Eq.1)}$$

where

f **is the frequency in GHz**

RLd **is the CAUI-4 Chip-to-module host output differential return loss**

3. **(Eq.2)** $$RLdc(f) \geq \begin{cases} 22 - 20\left(\frac{f}{25.78}\right) & 0.01 \leq f < 12.89 \\ 15 - 6\left(\frac{f}{25.78}\right) & 12.89 \leq f < 19 \end{cases} \quad (\text{dB})$$

where

f **is the frequency in GHz**

RLdc **is the CAUI-4 Chip-to-module output common to differential mode conversion return loss**

Optical Characteristics

Parameter	Symbol	Min	Typical	Max	Unit	Note
Transmitter Optical Characteristics						
Center Wavelength	λ	840		860	nm	
Spectral Width – RMS	Δλ		0.55		nm	
Average Launch Optical Power, each lane	LOP	-8.4		2.4	dBm	
Optical Modulation Amplitude, each lane	OMA	-6.4		3	dBm	
Launch power in OMA minus TDEC		-7.3			dBm	1
Transmitter and dispersion eye closure (TDEC), each lane	TDEC			4.3	dB	1
Average launch power of OFF transmitter, each lane				-30	dBm	
Extinction Ratio	ER	2			dB	
Optical return loss tolerance				12	dB	
Encircled Flux		≥ 86% @ 19um, ≤ 30% at 4.5um				1
Transmitter eye mask defiition		(X1, X2, X3, Y1, Y2, Y3) = (0.3, 0.38, 0.45, 0.35, 0.41, 0.5)				2

Notes:

1. **Designed target and belonging to TDP for further confirmation.**
2. **Hit ratio 1.5 × 10–3 hits per sample**

Parameter	Symbol	Min	Typical	Max	Unit	Note
Receiver Optical Characteristics						
Center wavelength, each lane	λ	840		860	nm	
Damage Threshold		3.4			dBm	
Average power at receiver input, each lane		-10.3		2.4	dBm	1
Receiver Power, each lane (OMA)				3	dBm	
Receiver Reflectance				-12	dB	
Stressed receiver sensitivity in OMA				-5.2	dBm	
Conditions of stressed receiver sensitivity test:						
Stressed eye closure (SEC)			4.3		dB	2
Stressed eye J2 Jitter			0.39		UI	2
Stressed eye J4 Jitter,				0.53	UI	2
OMA of each aggressor lane				3	dBm	2
Stressed receiver eye mask definition		(X1, X2, X3, Y1, Y2, Y3)= (0.28, 0.5, 0.5, 0.33, 0.33, 0.4}				3

Notes:

1. **Average receive power, each lane (min) is informative and not the principal indicator of signal strength. A received power below this value cannot be compliant; however, a value above this does not ensure compliance.**
2. **TDP value and dependent parameters are subject to confirmation.**
3. **Hit ratio 5 × 10–5 hits per sample**

QSFP28 Module Pad Assignments and Descriptions

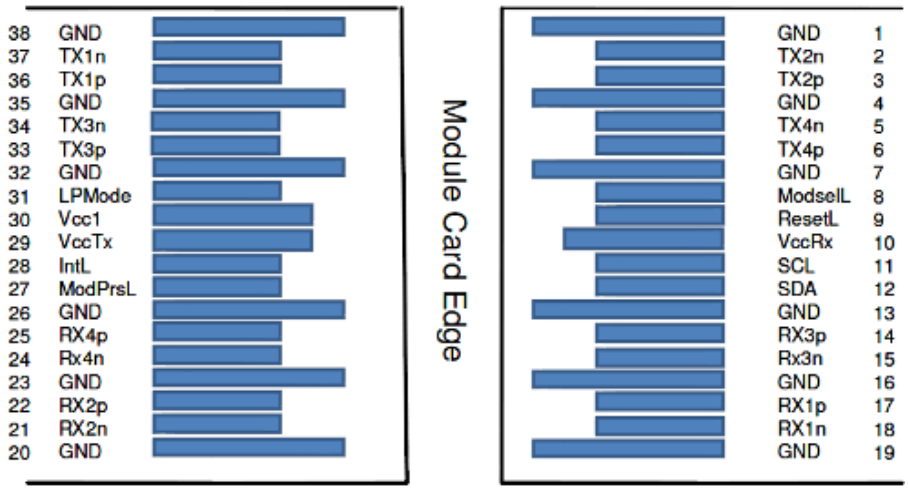

Pin	Logic	Symbol	Description	Plug Sequence	Notes
1		GND	Ground	1	
2	CML-I	Tx2n	Transmitter Inverted Data Input	3	
3	CML-I	Tx2p	Transmitter Non-Inverted Data Input	3	
4		GND	Ground	1	
5	CML-I	Tx4n	Transmitter Inverted Data Input	3	
6	CML-I	Tx4p	Transmitter Non-Inverted Data Input	3	
7		GND	Ground	1	
8	LVTTL-I	ModSelL	Module Select	3	
9	LVTTL-I	ResetL	Module Reset	3	
10		Vcc Rx	+3.3V Power Supply Receiver	2	
11	LVCMOS-I/O	SCL	2-wire serial interface clock	3	
12	LVCMOS-I/O	SDA	2-wire serial interface data	3	
13		GND	Ground	1	
14	CML-O	Rx3p	Receiver Non-Inverted Data Output	3	
15	CML-O	Rx3n	Receiver Inverted Data Output	3	

16		GND	Ground	1	
17	CML-O	Rx1p	Receiver Non-Inverted Data Output	3	
18	CML-O	Rx1n	Receiver Inverted Data Output	3	
19		GND	Ground	1	
20		GND	Ground	1	
21	CML-O	Rx2n	Receiver Inverted Data Output	3	
22	CML-O	Rx2p	Receiver Non-Inverted Data Output	3	
23		GND	Ground	1	
24	CML-O	Rx4n	Receiver Inverted Data Output	3	
25	CML-O	Rx4p	Receiver Non-Inverted Data Output	3	
26		GND	Ground	1	
27	LVTTL-O	ModPrsL	Module Present	3	
28	LVTTL-O	IntL	Interrupt	3	
29		Vcc Tx	+3.3V Power supply transmitter	2	
30		Vcc1	+3.3V Power supply	2	
31	LVTTL-I	LPMode	Low Power Mode	3	
32		GND	Ground	1	
33	CML-I	Tx3p	Transmitter Non-Inverted Data Input	3	
34	CML-I	Tx3n	Transmitter Inverted Data Input	3	
35		GND	Ground	1	
36	CML-I	Tx1p	Transmitter Non-Inverted Data Input	3	
37	CML-I	Tx1n	Transmitter Inverted Data Input	3	
38		GND	Ground	1	

Recommended Host Board Power Supply Circuit

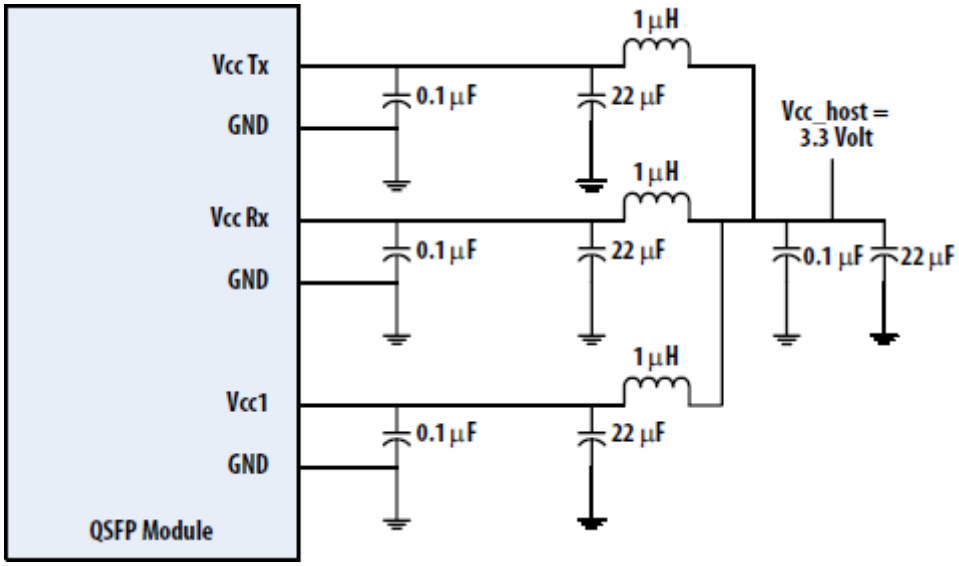

Recommended Interface Circuit

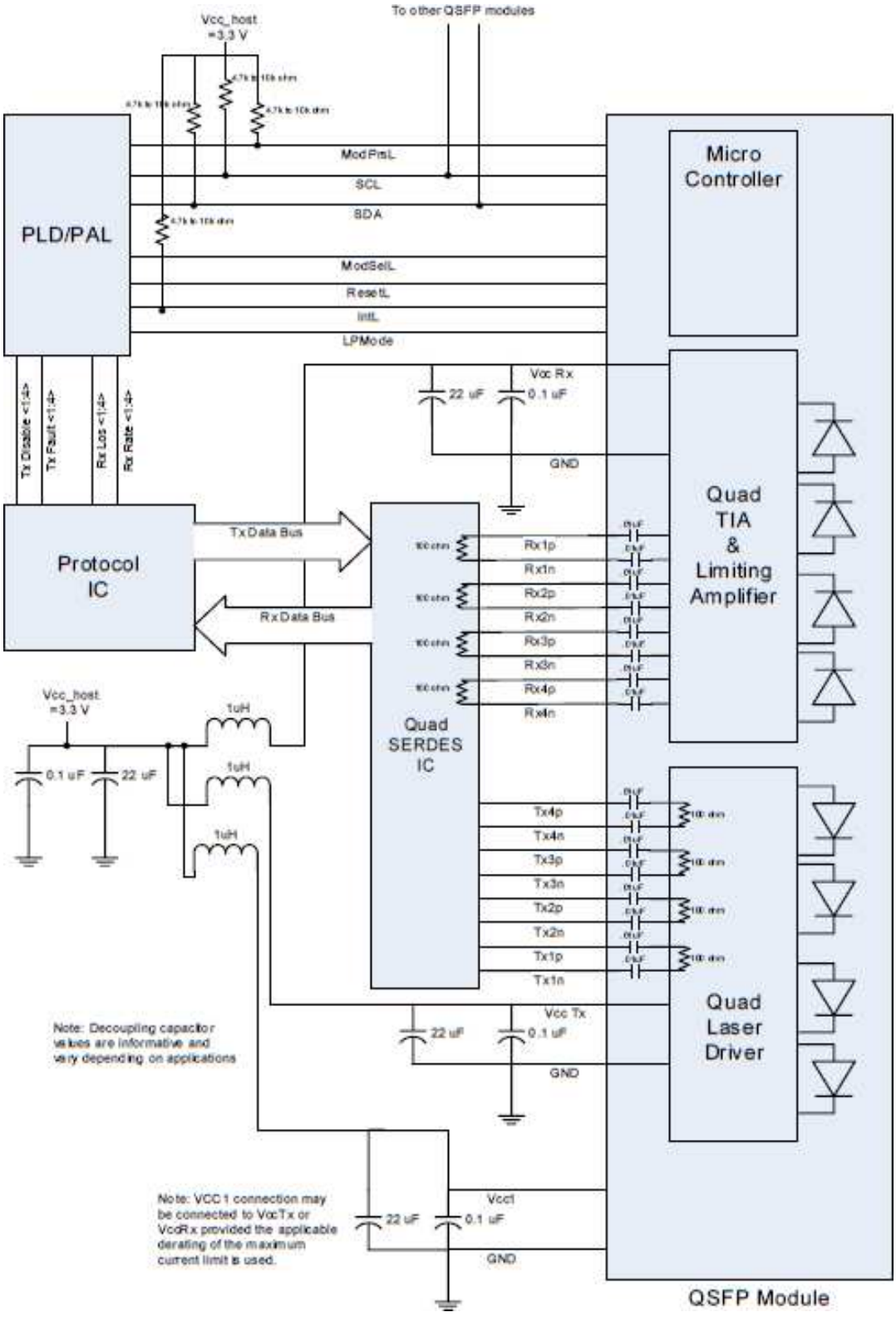

Mechanical Design Diagram (Unit: mm)

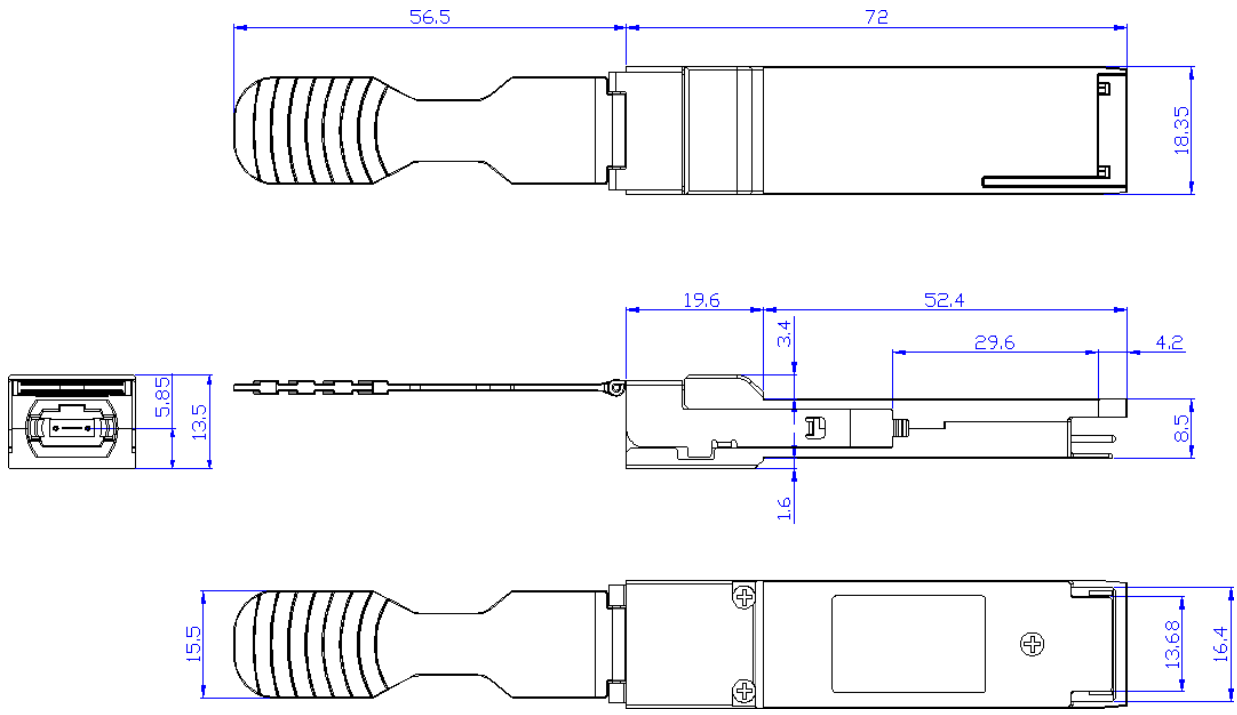

Memory Map

The memory map is structured as a single address and multiple page approaches, according to the QSFP28 SFF-8636 MSA specification as shown in the below. For more detailed description of this memory map or lower pages, please see our Memory Map document with flexible customization settings.

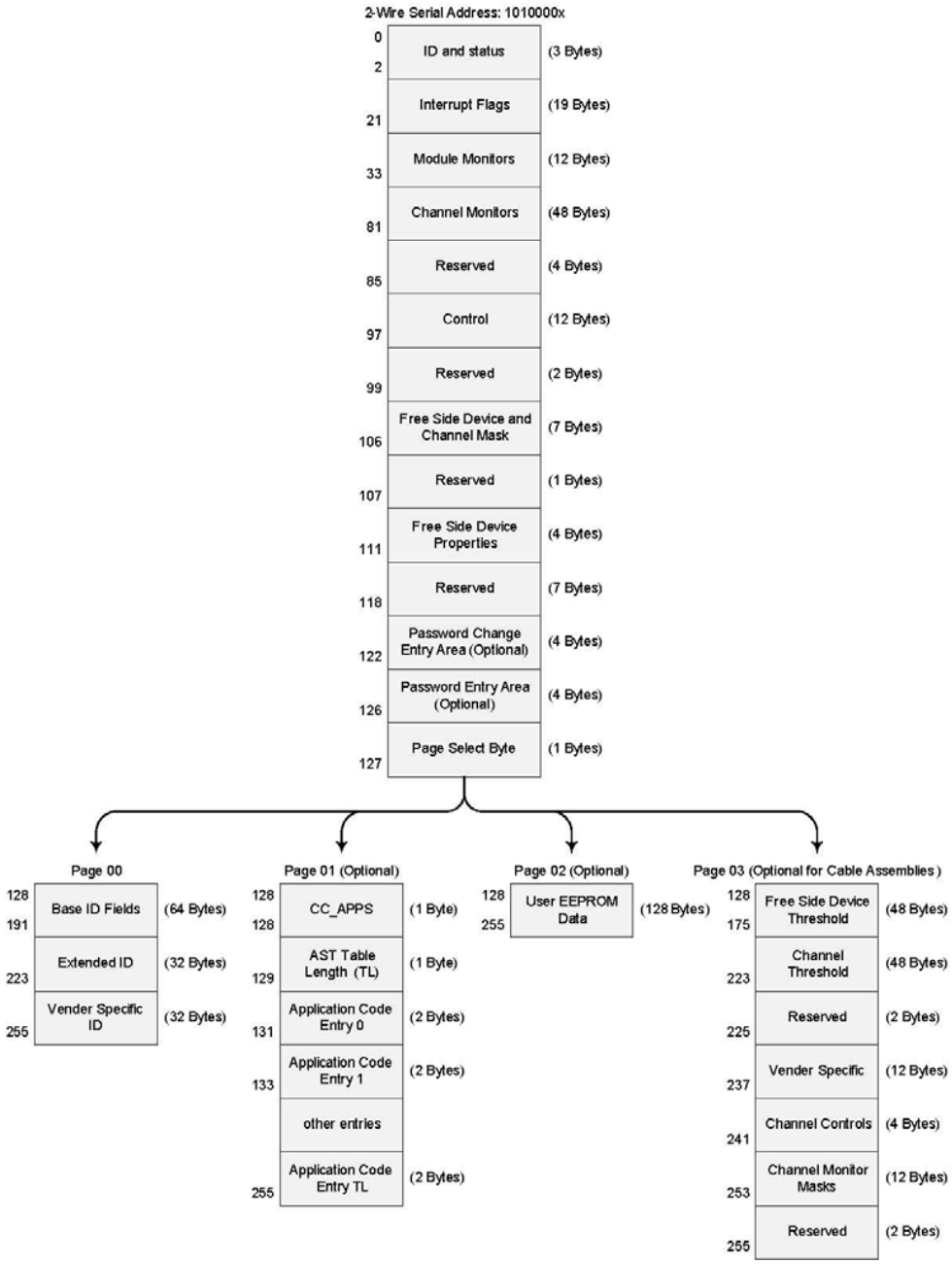

ESD

Normal ESD precautions are required during the handling of this module. This transceiver is shipped in ESD protective packaging. It should be removed from the packaging and handled only in an ESD protected environment.

Laser Safety

This is a Class 1 Laser Product according to IEC / EN 60825-1: 2014 (Third Edition). This product complies with 21 CFR 1040.10 and 1040.11 except for deviations pursuant to Laser Notice No. 50, dated (June 24, 2007). Caution : Laser Radiation. Do not expose users of telescopic optics.

Contact Information

Formerica OptoElectronics Inc.
5F-11, No.38, Taiyuan St., Zhubei City,
Hsinchu County 30265, Taiwan
Tel: +886-3-5600286
Fax: +886-3-5600239

San Diego, CA
Tel: 1-949-466-8069

inquiry@formericaoe.com
www.formericaoe.com