Specification

Quad Small Form-factor Pluggable

Optical Transceiver Module

100GBASE-SR4, ET

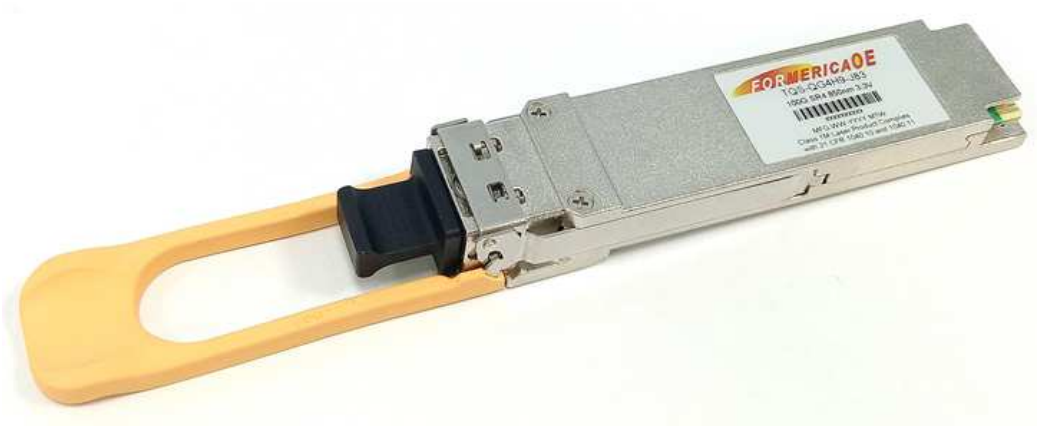

Ordering Information

TQS–QG4H9–J83

Model Name	Voltage	Category	Device type	Temperature	Distance	Latch Color
TQS-QG4H9-J83	3.3V	With DDMI	850 nm VCSEL	-20°C~+85°C	100m (OM4)	Beige

Features

- Supports 100Gb/s data rate links of 70m/100m via OM3/OM4, respectively
- Low power consumption <1.9W (Typ. 1.7W)
- Hot pluggable electrical interface
- Single 3.3V power supply
- Using standard 12 or 8 lane optical fiber with MPO pluggable optical connector
- -20 to 85°C case temperature operating range
- 4x25Gb/s 850nm VCSEL-based transmitter
- RoHS Compliant
- Compliant with 100G Ethernet IEEE 802.3bm 100GBASE-SR4
- Compliant with SFF-8665 (QSFP28 Solution)

Applications

- 100GBASE-SR4 Ethernet links.
- Infiniband EDR.
- HPC Interconnects.
- Proprietary Interconnections.

Pin Descriptions

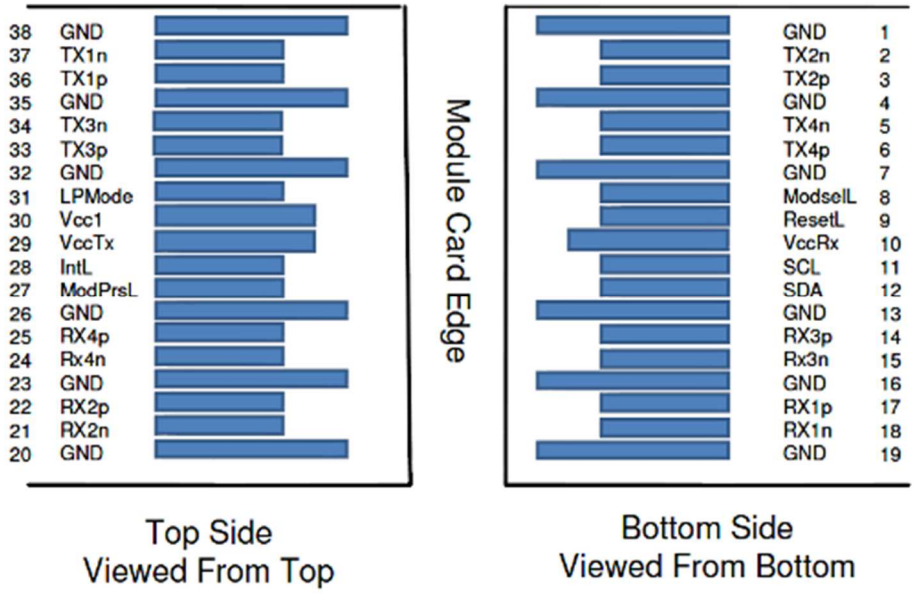

Pin	Logic	Symbol	Description	Plug Sequence	Notes
1		GND	Ground	1	
2	CML-I	Tx2n	Transmitter Inverted Data Input	3	
3	CML-I	Tx2p	Transmitter Non-Inverted Data Input	3	
4		GND	Ground	1	
5	CML-I	Tx4n	Transmitter Inverted Data Input	3	
6	CML-I	Tx4p	Transmitter Non-Inverted Data Input	3	
7		GND	Ground	1	
8	LVTTL-I	ModSelL	Module Select	3	
9	LVTTL-I	ResetL	Module Reset	3	
10		VCC Rx	+3.3V Power Supply Receiver	2	
11	LVCMOS-I/O	SCL	2-wire serial interface clock	3	
12	LVCMOS-I/O	SDA	2-wire serial interface data	3	
13		GND	Ground	1	
14	CML-O	Rx3p	Receiver Non-Inverted Data Output	3	
15	CML-O	Rx3n	Receiver Inverted Data Output	3	
16		GND	Ground	1	
17	CML-O	Rx1p	Receiver Non-Inverted Data Output	3	
18	CML-O	Rx1n	Receiver Inverted Data Output	3	
19		GND	Ground	1	
20		GND	Ground	1	
21	CML-O	Rx2n	Receiver Inverted Data Output	3	
22	CML-O	Rx2p	Receiver Non-Inverted Data Output	3	
23		GND	Ground	1	
24	CML-O	Rx4n	Receiver Inverted Data Output	3	
25	CML-O	Rx4p	Receiver Non-Inverted Data Output	3	
26		GND	Ground	1	
27	LVTTL-O	ModPrsL	Module Present	3	
28	LVTTL-O	IntL	Interrupt	3	
29		VccTx	+3.3V Power supply transmitter	2	

30		Vcc1	+3.3V Power supply	2	
31	LVTTL-I	LPMode	Low Power Mode	3	
32		GND	Ground	1	
33	CML-I	Tx3p	Transmitter Non-Inverted Data Input	3	
34	CML-I	Tx3n	Transmitter Inverted Data Input	3	
35		GND	Ground	1	
36	CML-I	Tx1p	Transmitter Non-Inverted Data Input	3	
37	CML-I	Tx1n	Transmitter Inverted Data Input	3	
38		GND	Ground	1	

Absolute Maximum Rating

Not necessarily applied together. Exceeding these values may cause permanent damage. Functional operation under these conditions is not implied.

Parameter	Symbol	Min	Typ.	Max	Unit	Note
Storage Temperature	Ts	-40		85	℃	
3.3V Power Supply Voltage	VCC	-0.5		3.6	V	
Relative Humidity	RH	5		85	%	
Rx Optical Damage Threshold / Lane		3.4			dBm	

Notes : Non-condensing.

Recommended Operating Conditions

Parameter	Min	Typical	Max	Unit	Note
Case Operating Temperature	-20		85	℃	
Power Supply Voltage	3.135	3.3	3.465	V	
Data Rate per Channel		25.78125		Gb/s	

Electrical Characteristics

Parameter	Min	Typical	Max	Unit	Note
Transceiver Electrical Characteristics					
TRX Power Consumption		1.7	1.9	W	
TRX Power-on Initialization Time			2000	ms	
CAUI-4 Module Electrical Input Characteristics (TP1)					
Signaling Rate per Lane	25.78125+/-		Gb/s		
Differential PK-PK input voltage	900			mV	
Module stressed input test	Per Section 83E.3.4.1, IEEE 802.3bm				1
Single Ended Input Voltage Tolerance	-0.4		3.3	V	
CAUI-4 Module Electrical Output Characteristics (TP4)					
Signaling Rate per Lane	25.78125+/- 100ppm		Gb/s		
Differential Data Output Swing	400	600	900	mVpp	
Eye Width	0.57			UI	
Eye Height, Differential	228			mV	
Vertical Eye Closure			5.5	dB	
Transition Time (20% to 80%)	12			PS	

Notes:

1. **The module stressed input tolerance is measured using the procedure defined in 83E.3.4.1.1, IEEE802.3bm. Module stressed input parameters include.**
   a. **Eye width of 0.46 UI.**
   b. **Applied PK-PK sinusoidal jitter is per Table 88-13 per IEEE802.3bm**
   c. **Eye height of 95mV**

Optical Characteristics

Parameter	Symbol	Min	Typical	Max	Unit	Note
Transmitter Optical Characteristics						
Signaling Rate per Lane			25.78125+/-100ppm		Gb/s	
Center Wavelength	λ	840	850	860	nm	
Spectral Width – RMS	σλ		0.55	0.6	nm	
Average Launch Optical Power, each lane	TXPX	-8.4		2.4	dBm	
OMA, each lane	OMA	-7		3	dBm	
Launch power in OMA minus TDEC		-7.3			dBm	1
Transmitter and dispersion eye closure (TDEC), each lane	TDEC			4.3	dB	1
Average launch power of OFF transmitter, each lane				-30	dBm	
Extinction Ratio	ER	2			dB	
Optical return loss tolerance				12	dB	
Encircled Flux				≥ 86% @ 19um, ≤ 30% at 4.5um		1
Transmitter eye maskdefinition				(X1, X2, X3, Y1, Y2, Y3) = (0.3, 0.38, 0.45, 0.35, 0.41, 0.5)		2

Notes:

1. **Designed target and belonging to TDP for further confirmation.**
2. **Hit ratio 1.5×10^{-3} hits per sample**

Parameter	Symbol	Min	Typical	Max	Unit	Note
Receiver Optical Characteristics						
Signaling Rate per Lane		25.78125+/- 100ppm			Gb/s	
Center wavelength, each lane	λ	840	850	860	nm	
Damage Threshold		3.4			dBm	
Average power at receiver input, each lane		-10.3		2.4	dBm	1
Receiver Power, each lane (OMA)				3	dBm	
Receiver Reflectance				-12	dB	
Unstressed Receiver Sensitivity (OMA) at BER $1E^{-12}$				-6	dBm	

Notes:

1. **Average receive power, each lane (min) is informative and not the principal indicator of signal strength. A received power below this value cannot be compliant; however, a value above this does not ensure compliance.**

Mechanical Design Diagram (Unit: mm)

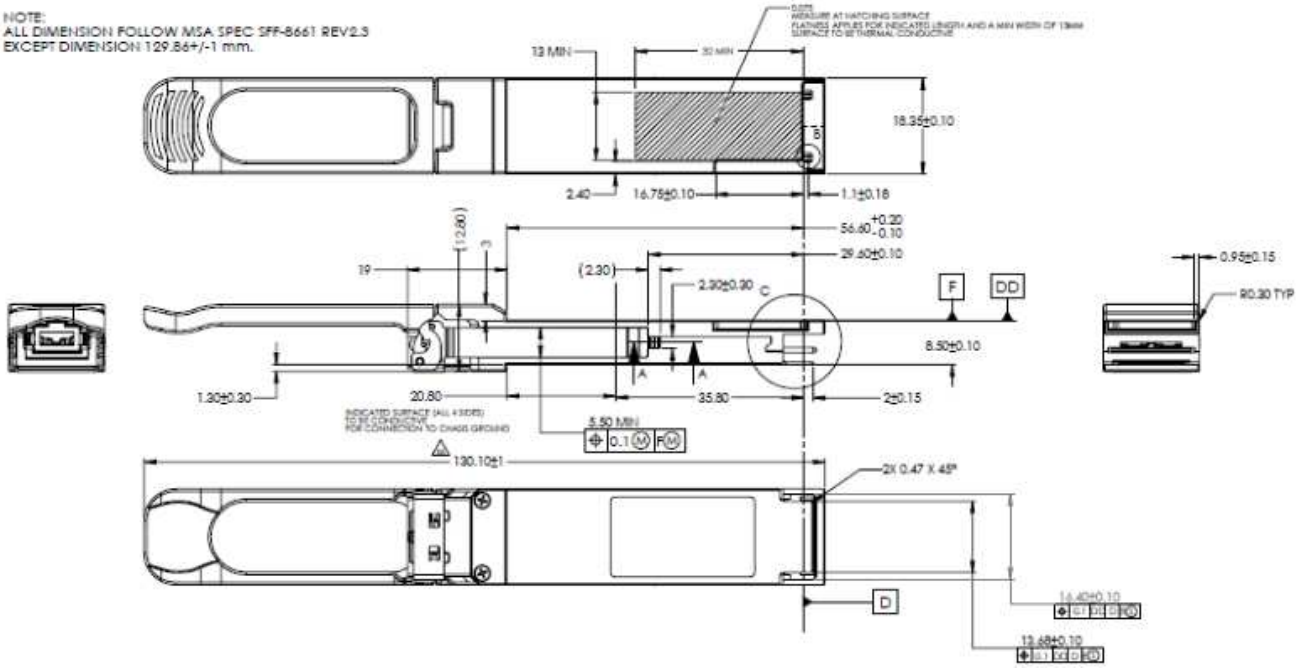

Memory Map

The memory map is structured as a single address and multiple page approaches, according to the QSFP28 SFF-8636 MSA specification as shown in the below.

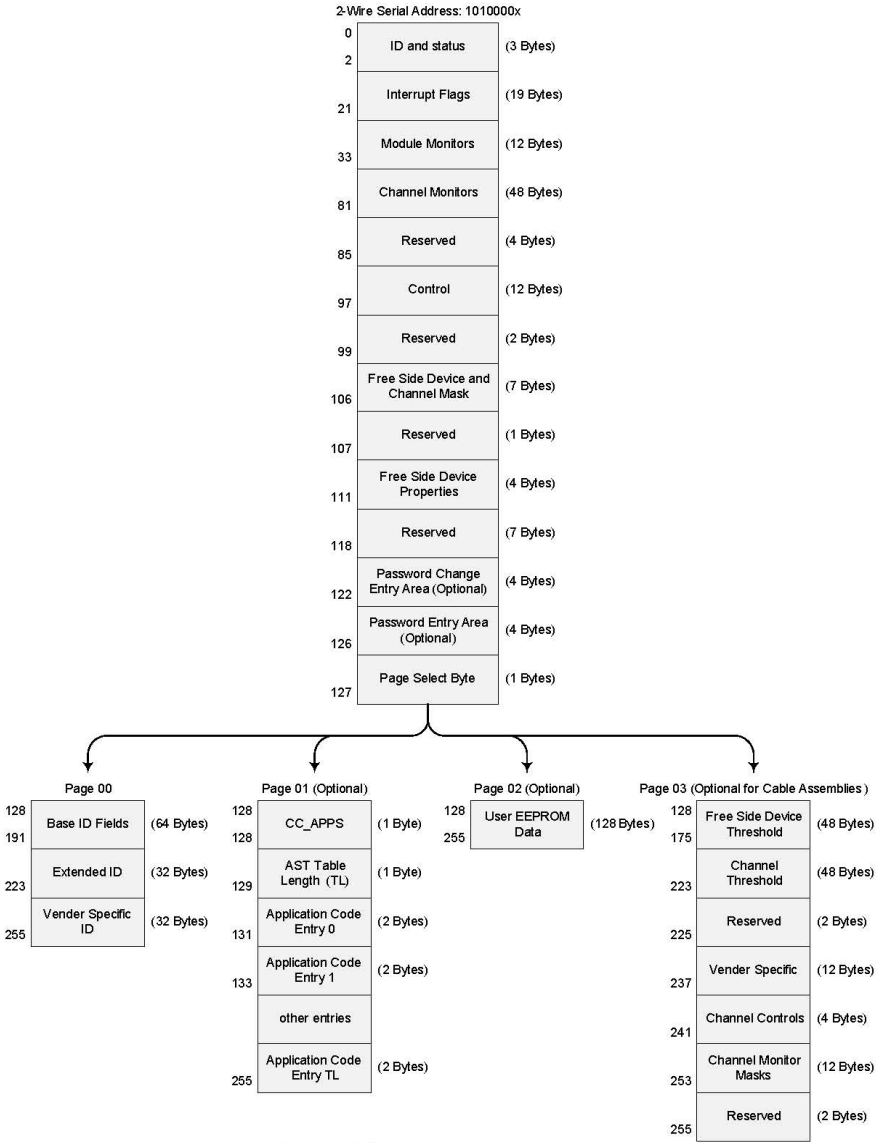

ESD

Normal ESD precautions are required during the handling of this module. This transceiver is shipped in ESD protective packaging. It should be removed from the packaging and handled only in an ESD protected environment.

Laser Safety

This is a laser class 1M product according to IEC/EN60825-1:2014 (Third Edition). This product complies with 21 CFR 1040.10 and 1040.11 except for deviations pursuant to Laser Notice No. 50, dated June 24, 2007.

User Manual

CAUTION

Pull-Tab may shear off or snap if any one of the conditions are broken.

1) Angular degree ≤ 30°

2) Tensile strength ≤ 60 newton

Contact Information

Formerica OptoElectronics Inc.
5F-11, No.38, Taiyuan St., Zhubei City,
Hsinchu County 30265, Taiwan
Tel: +886-3-5600286
Fax: +886-3-5600239

San Diego, CA
Tel: 1-949-466-8069

inquiry@formericaoe.com
www.formericaoe.com