Specification

Small Form Factor Pluggable

Duplex LC Receptacle – SFP

Optical Transceivers

STM-1 / OC-3 / 100BASE
155.52Mbit/s

Ordering Information

T S P - SxAA1 – M1T

Voltage / Temperature
1. 3.3V / +0 ~ +70℃
2. 3.3V / -40 ~ +85℃

Model Name	Voltage	Device type	Temperature	Distance	Latch Color
TSP-S1AA1-M1T	3.3V	FP / PIN	+0 ~ +70℃	60km	Blue
TSP-S2AA1-M1T			-40 ~ +85℃		

Features

- Duplex LC receptacle optical interface compliant
- Single 3.3V power supply
- Hot-pluggable
- Uncooled 1310nm FP laser transmitter
- Receiver loss of signal output
- AC / AC Coupling according to MSA
- Transmitter disable input
- Serial ID module on MOD (0-2)
- ROHS Compliant

APPLICATIONS

- SDH / STM-1 , SONET / OC-3
- Metropolitan area network

Absolute Maximum Ratings

Parameter	Symbol	Min	Typ	Max	Unit
Storage temperature	TS	-40		85	℃
Supply voltage	VCC	-0.5		4	V
Soldering Temperature (10 seconds on leads only)	Tsold			260	℃

Recommended Operating Conditions

Parameter	Symbol	Min	Typ	Max	Unit
Power Supply Voltage	V_{CC}	3.1	3.3	3.5	V
Operating Case temperature (TSP-S1AA1-M1T)	Top	0	-	70	ºC
Operating Case temperature (TSP-S2AA1-M1T)		-40		85	
Bit Rate	BR		155	Mbps	
Supply Current	Icc	-	150	300	mA

Transmitter Specifications (VCC = 3.1V ~ 3.5V ; Top = 0 ~ 70℃ / Top = -40 ~ 85℃)

Parameter	Symbol	Min	Typ	Max	Unit
Optical Characteristics					
Output Optical Power	P_O	-3	--	+2	dBm
Extinction Ratio	ER	10	--	--	dB
Center Wavelength	λ	1260	1310	1360	nm
Output Spectrum Width	σλ	--	--	7	nm
Rise/Fall time (10-90%)	T_r / T_f	--	1	1.5	ns
Relative Intensity Noise	RIN	--	--	-120	dB/Hz
Output Eye	Compliant with ITU-T G.957				
Electrical Characteristics					
Differential Input Voltage	V_{DIFF}	0.5	--	2.4	V
Tx Disable Input High	V_{DISH}	2.0	--	V_{CC}+0.3	V
Tx Disable nput Low	V_{DISL}	0	--	0.5	V
Tx Fault Output High	V_{FH}	2.0	--	V_{CC}+0.3	V
Tx Fault Output Low	V_{FL}	0	--	0.8	V

Receiver Specifications (VCC = 3.1 ~ 3.5V ; Top = 0 ~ 70℃ / Top = -40 ~ 85℃)

Parameter	Symbol	Min	Typ	Max	Unit
Optical Characteristics					
Input Power maximum	P_{max}	-8	--	--	dBm
Sensitivity (PRBS=2^{23}-1 ; BER≦10^{-10})	Sens	--	--	-34	dBm
Center Wavelength	λ	1100		1610	nm
Loss of Signal De-asserted	P_{SD}	--	--	-35	dBm
Loss of Signal Asserted	P_{SA}	-45	--	--	dBm
Loss of Signal - Hysteresis	P_{SH}	1		5	dB
Electrical Characteristics					
Differential Output Voltage	V_{DIFF}	0.6	--	2.0	V
Receiver Loss of Signal Output Voltage -Low	V_{LOSH}	0	--	0.8	V
Receiver Loss of Signal Output Voltage -High	V_{LOSL}	2	--	V_{CC}+0.3	V

Pin Definition and Descriptions

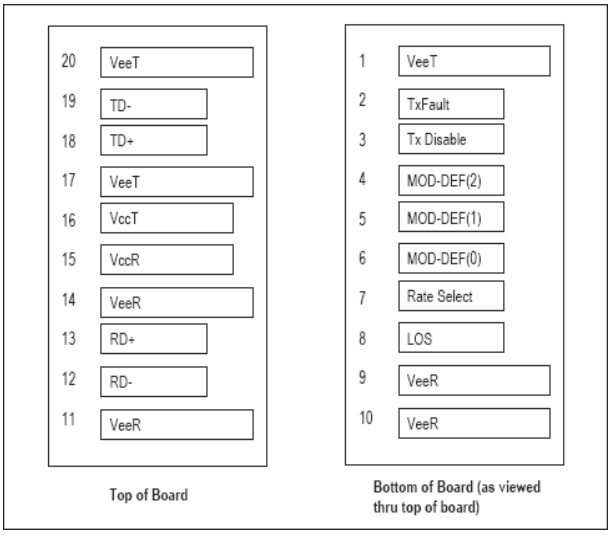

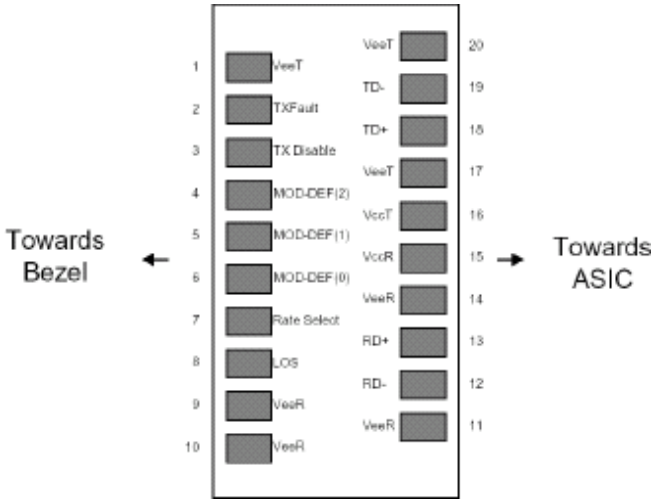

Pin	Name	Input / Output Level	Description
1	VeeT	Input	Transmitter ground
2	TXFault	Output/LVTTL	Laser failure indication. High level indicates "laser failure". Externally pulled up
3	TXDisable	Input/LVTTL	Transmitter disable, High signal/open disables TX laser output. Low level enables TX output, internally pulled up.
4	MOD-DEF(2)	Input/output	Module definition 2, SDA, Data line for I2C bus. Externally pulled up
5	MOD-DEF(1)	Input	Module definition 1, SCL, Clock for I2C bus. Externally pulled up
6	MOD-DEF(0)	Output	Module definition 0, Module present. Ground inside module.
7	Rate Select	-	No connection.
8	LOS	Output/LVTTL	Receiver loss of signal indication. Low signal indicates optical signal is present at RX input. Should be Externally pulled up.
9	VeeR	Input	Receiver ground
10	VeeR	Input	Receiver ground
11	VeeR	Input	Receiver ground
12	RD -	Output/LVPECL	Inverted receiver data output (AC coupled)
13	RD +	Output/LVTTL	Non-inverted receiver data output (AC coupled)
14	VeeR	Input	Receiver ground
15	VccR	Input	Receiver power supply
16	VccT	Input	Transmitter power supply
17	VeeT	Input	Transmitter ground
18	TD +	Input/LVPECL	non-inverted transmitter data input (AC coupled)
19	TD -	Input/LVPECL	Inverted transmitter data input (AC coupled)
20	VeeT	Input	Transmitter ground

Recommended Circuit Diagram

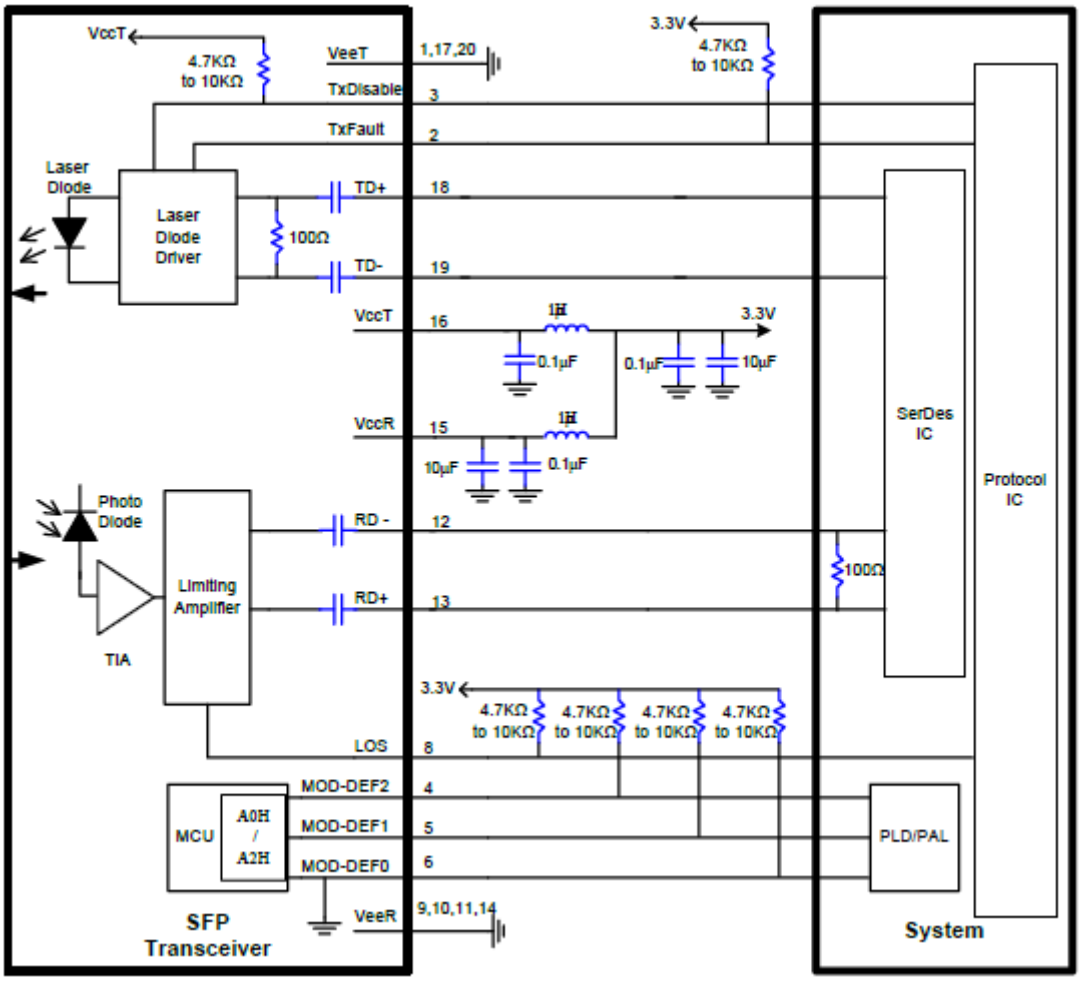

Mechanical Outlines (Unit : mm)

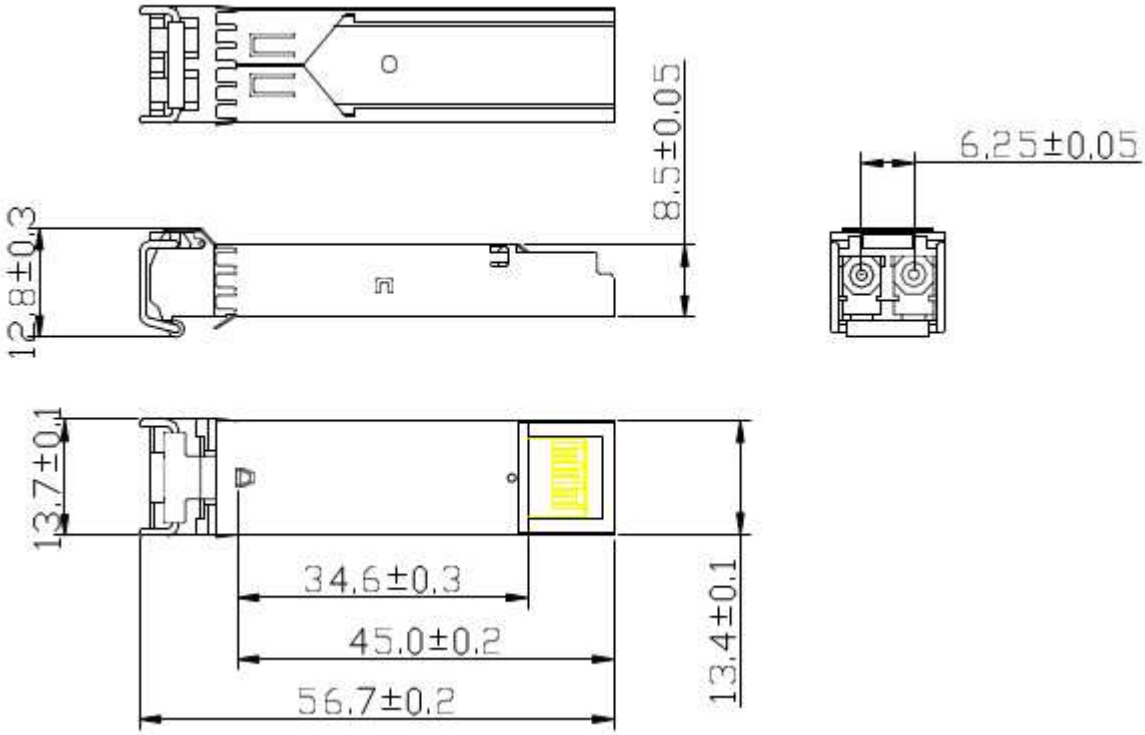

ESD

Normal ESD precautions are required during the handling of this module. This transceiver is shipped in ESD protective packaging. It should be removed from the packaging and handled only in an ESD protected environment.

Contact Information

Formerica OptoElectronics Inc.
5F-11, No.38, Taiyuan St., Zhubei City,
Hsinchu County 30265, Taiwan
Tel: +886-3-5600286
Fax: +886-3-5600239

San Diego, CA
Tel: 1-949-466-8069

inquiry@formericaoe.com
www.formericaoe.com